Vending Machine

Name: Gautam Raj Chhabra
Project: Vending Machine
Language: Verilog HDL
Tool Used: Vivado Xilinx

1. Abstract

This project implements a FSM based vending machine using Verilog HDL. The machine accepts ₹5 and ₹10 coins and dispenses the product at ₹15, while returning change for extra amount. The design is simulated, synthesized, and implemented using Xilinx Vivado to verify correct hardware behavior.

2. Introduction

This project implements a vending machine controller using Verilog HDL. The system is designed using a Finite State Machine that accepts ₹5 and ₹10 coins and dispenses a product when ₹15 is reached. The design is verified using simulation, synthesis, and implementation in Xilinx Vivado.

3. Operational States

S0 – 0 Rs
S5 – 5 Rs
S10 – 10 Rs
S15 – 15 Rs (Dispense)

The FSM changes state based on coin5 and coin10 inputs.
When 15 Rs is reached, dispense = 1.
If 20 Rs is inserted, change5 = 1.

4. Verilog Design Code

```
module vending_machine(input clk, input reset, input coin5,
input coin10, output reg dispense , output reg change5);
```

```
  reg[1:0]state,next_state;
parameter s0=2'b00;   parameter
s5=2'b01;   parameter
s10=2'b10;   parameter
s15=2'b11;

  always@(posedge clk or posedge reset)
begin       if(reset)
state<=s0;       else
state<=next_state;     end
always@(*)     begin       case(state)
s0:
        if(coin5)
next_state=s5;         else
if(coin10)
next_state=s10;         else
next_state=s0;
                  s5:
if(coin5)
next_state=s10;
else if(coin10)
next_state=s15;
else
next_state=s5;
s10:          if(coin5)
next_state=s15;
else if(coin10)
next_state=s0;
else
next_state=s10;
s15:
next_state=s0;
default:
next_state=s0;
```

```
endcase     end
always@(*)     begin
dispense=0;
change5=0;
case(state)
s15:
dispense=1;
s10:         if(coin10)
begin
dispense=1;
change5=1;
end         default:
begin         dispense
= 0;         change5 =
0;     end
      endcase
end
endmodule
```

5. Testbench

The testbench is used to verify the vending machine design. It generates clock, reset, coin5, and coin10 signals to check correct state transitions and outputs.

```
module testbench;
 reg clk;
reg reset;
reg coin5;
reg coin10;
 wire
dispense; wire
change5;

vending_machine DUT(
clk,     reset,
coin5,     coin10,
dispense,
change5
```

```
);  initial   begin
clk=0;     forever #5
clk=~clk;   end  initial
begin
  $dumpfile("dump.vcd");
    $dumpvars(0,testbench);


  $monitor("time=%0t reset=%b coin5=%b coin10=%b
dispense=%b change5=%b",$time, reset, coin5, coin10,
dispense, change5);
     clk = 0;
reset = 1;
coin5 = 0;
coin10 = 0;

    #10 reset = 0;

    #10 coin5 = 1;
    #10 coin5 = 0;

    #10 coin10 = 1;
    #10 coin10 = 0;

    #50 $finish;
end  endmodule
```

6. Simulation Result

The vending machine design was verified using a Verilog testbench in Xilinx Vivado simulator. Different combinations of coin5 and coin10 inputs were applied to check the correct state transitions.

```
time=0 reset=1 coin5=0 coin10=0 dispense=0 change5=0
time=10000 reset=0 coin5=0 coin10=0 dispense=0 change5=0
time=20000 reset=0 coin5=1 coin10=0 dispense=0 change5=0
time=30000 reset=0 coin5=0 coin10=0 dispense=0 change5=0
time=40000 reset=0 coin5=0 coin10=1 dispense=0 change5=0
time=45000 reset=0 coin5=0 coin10=1 dispense=1 change5=0
time=50000 reset=0 coin5=0 coin10=0 dispense=1 change5=0
time=55000 reset=0 coin5=0 coin10=0 dispense=0 change5=0
$finish called at time : 100 ns : File "C:/vivado/vending/machine/machine.srcs/sim_1/new/mac_tb.v" Line 48
```

7. Waveform

The waveform obtained from Vivado simulation shows correct state transitions for coin5 and coin10 inputs. The dispense signal becomes high at 15 Rs, and change5 becomes high when extra amount is inserted. The waveform verifies correct operation of the vending machine FSM.

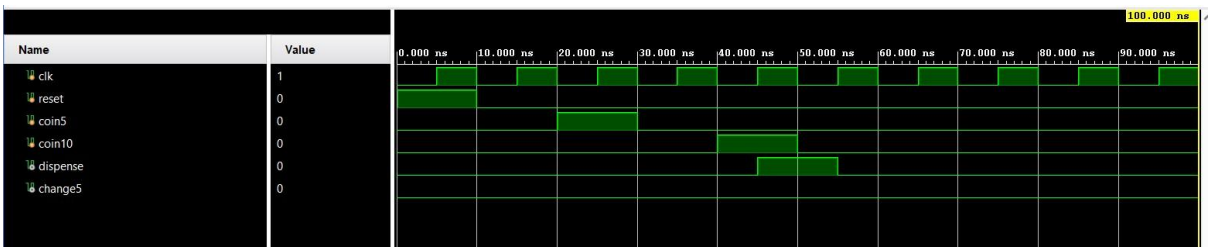

8. RTL Schematic

The RTL schematic generated in Vivado shows the internal structure of the vending machine FSM. It contains state registers, combinational logic, and output logic connected to clk, reset, coin5, and coin10 inputs. The RTL view confirms correct hardware representation of the Verilog design.

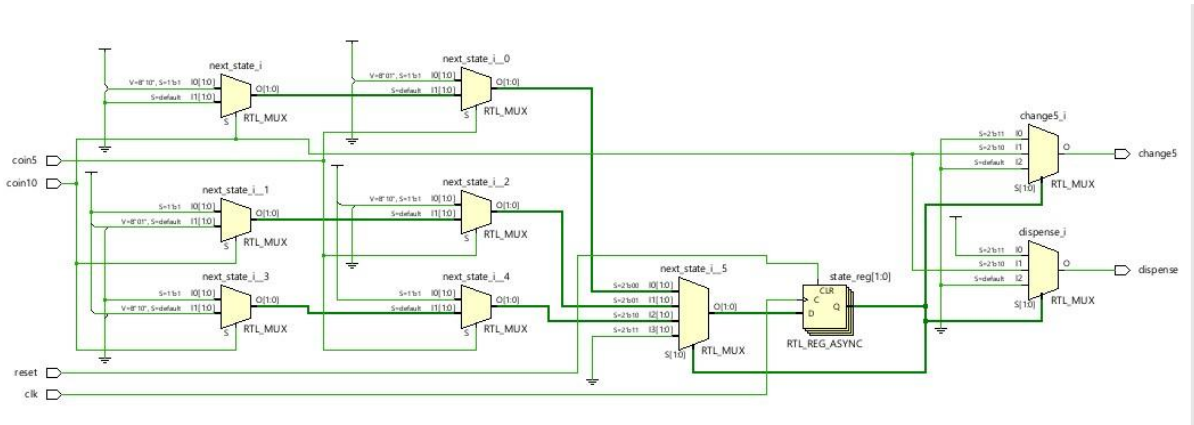

9. Implementation Schematic

The implementation schematic shows the final hardware mapping of the design on FPGA resources. It confirms that the vending machine FSM is correctly implemented using LUTs, flip-flops, and routing logic in Vivado.

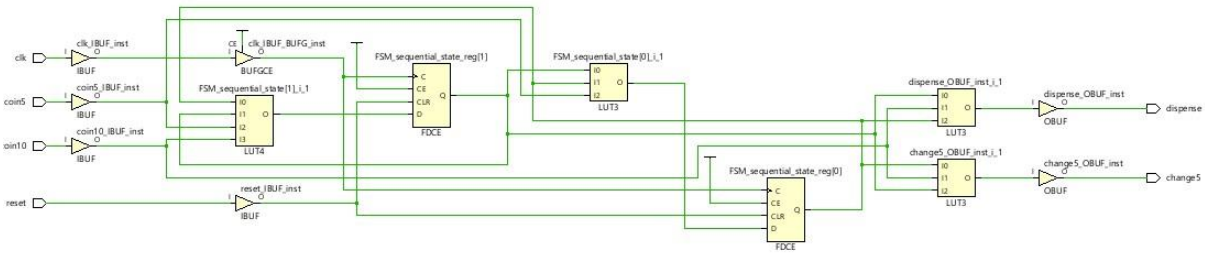

10. Conclusion

The vending machine was successfully implemented using Verilog HDL and verified using Vivado. Simulation, synthesis, and implementation results confirm correct FSM operation, proper dispensing at 15 Rs, and correct change return for 20 Rs input.